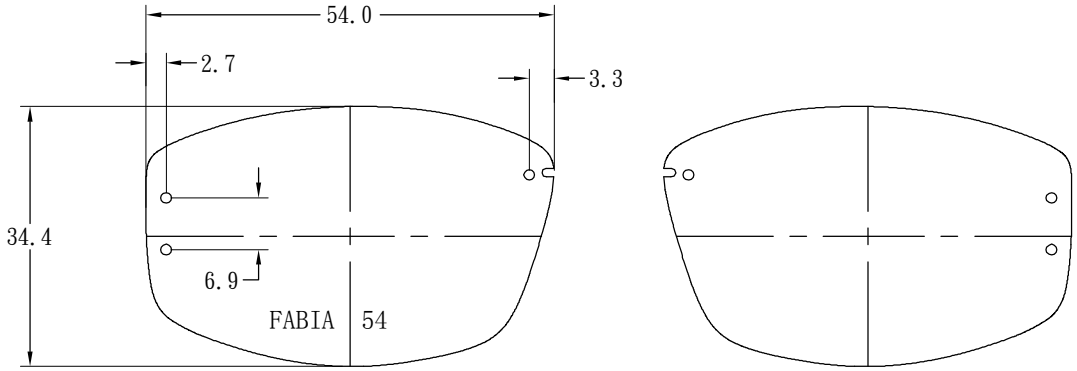
54.0
2.7
3.3
34.4
6.9
FABIA
54

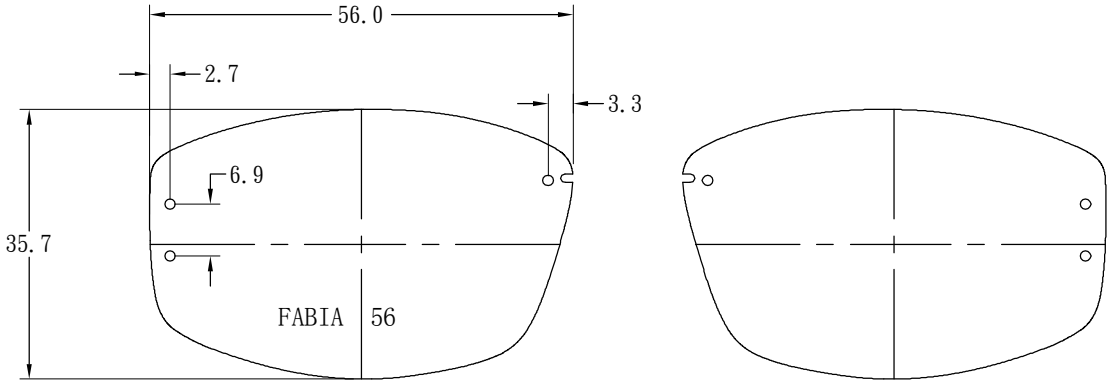
56.0
2.7
3.3
6.9
35.7
FABIA
56

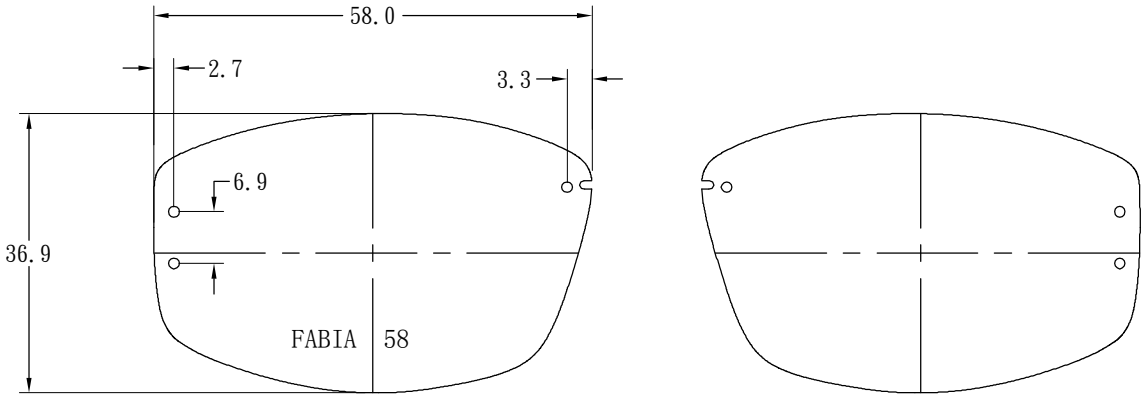
58.0
2.7
3.3
6.9
36.9
FABIA
58